# Thermowell TYPE LDW

## Weld-in thermowell

- Weld-in thermowell f. thermometers - acc. to DIN 43772 (formerly DIN 43763 for use in containers, tanks and tank systems, for installation/replacement of sensors without having to drain or evacuate the process. HIGH-RESSURE RANGE. Design pressure: 500 bar inside.
- Standard material for thermowell is stainless steel AISI 316TI.

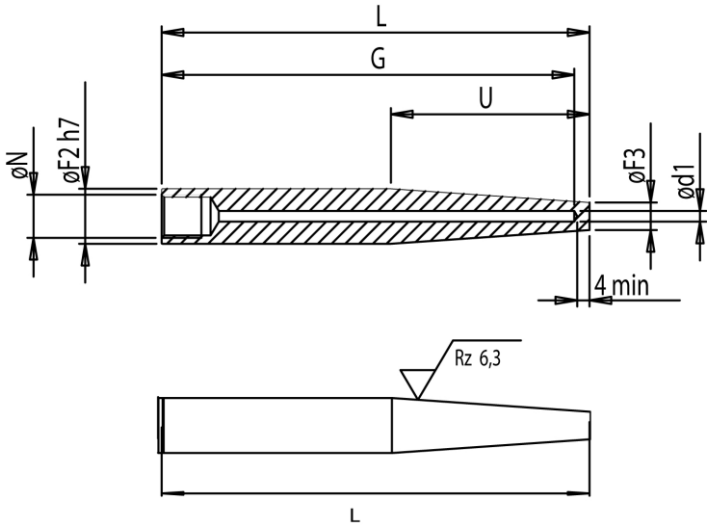


Ordering: See ordering form on back page

# ORDERING FORM / THERMO COUPLE TYPE LDW

## Type LDW

V1.0

**Dimension/Thermowell/mm**

| L | U | G | N | F2 | F3 | d1 | |
|---|---|---|---|---|---|---|---|
| 110 | 65 | 105 | M14×1.5 | 18 | 9.0 | 3.5 | 118 |
| 110 | 73 | 105 | M14×1.5 | 18 | 9.0 | 3.5 | 218 |
| 140 | 65 | 135 | M14×1.5 | 18 | 9.0 | 3.5 | 318 |
| 200 | 65 | 195 | M14×1.5 | 18 | 9.0 | 3.5 | 418 |
| 200 | 125 | 195 | M14×1.5 | 18 | 9.0 | 3.5 | 518 |
| 260 | 125 | 255 | M14×1.5 | 18 | 9.0 | 3.5 | 618 |
| 110 | 65 | 105 | M18×1.5 | 24 | 12.5 | 7 | 124 |
| 110 | 73 | 105 | M18×1.5 | 24 | 12.5 | 7 | 224 |
| 140 | 65 | 135 | M18×1.5 | 24 | 12.5 | 7 | 324 |
| 170 | 133 | 165 | M18×1.5 | 24 | 12.5 | 7 | 424 |
| 200 | 125 | 195 | M18×1.5 | 24 | 12.5 | 7 | 524 |
| 200 | 65 | 195 | M18×1.5 | 24 | 12.5 | 7 | 624 |
| 260 | 125 | 255 | M18×1.5 | 24 | 12.5 | 7 | 724 |
| 410 | 275 | 405 | M18×1.5 | 24 | 12.5 | 7 | 824 |
| 110 | 65 | 105 | 1/2"BSP | 26 | 12.5 | 7 | 126 |
| 110 | 73 | 105 | 1/2"BSP | 26 | 12.5 | 7 | 226 |
| 140 | 65 | 135 | 1/2"BSP | 26 | 12.5 | 7 | 326 |
| 200 | 65 | 195 | 1/2"BSP | 26 | 12.5 | 7 | 426 |
| 200 | 125 | 195 | 1/2"BSP | 26 | 12.5 | 7 | 526 |
| 260 | 125 | 255 | 1/2"BSP | 26 | 12.5 | 7 | 626 |
| 410 | 275 | 405 | 1/2"BSP | 26 | 12.5 | 7 | 726 |

**Material/Thermowell**

| | W.nr. | |
|---|---|---|
| 1 | 1.4571 | (AISI 316TI) |
| 2 | 1.5415 | (16Mo3) |
| 3 | 1.7335 | (13CrMo4-5) |
| 4 | 1.7380 | (10CrMo9-10) |
| 5 | 1.4961 | (X8CrNiNb1613) |

**Head office:**

Senmatic A/S
Industrivej 8, 5471 Søndersø, Denmark
Phone: +45 64 89 22 11
dk@senmatic.com - www.senmatic.com